$$T_w = \frac{4 \times 10^7}{2 \times 1000} \times \frac{5}{1000} + 25^\circ C$$

$T_w = 125^\circ C$

$T_w = 398\ K$

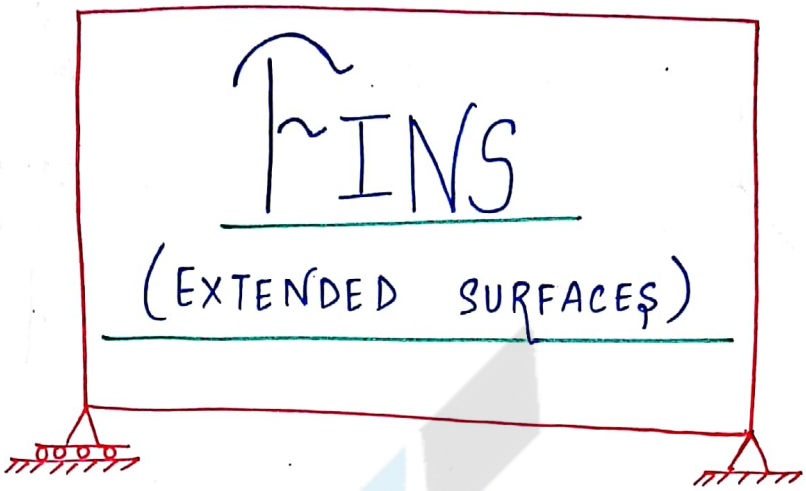

Fins are the projections protuding from a hot surface into ambient fluid and they are meant for increasing H.T. rate by increasing the surface area of Heat Transfer.

Ex:- (1) Air cooled I/c Engines.

(2) Reciprocating Air compressors.

(3) Refrigerator and A/c condenser units.

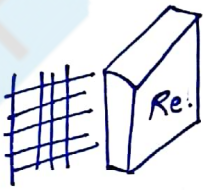

(4) Electric motors and Transformers.

(5) Electronic Devices.

(6) Automobile Radiator.

Note:- fins are always used only when the convective H.T. coeffi's are relatively low that is with gases (air).

h_{low}.

This PDF was downloaded from www.thegatehunt.com
MOHIT KUMAR CHOUKSEY
Scanned by CamScanner

* **Analysis of Rectangular Fin :-**

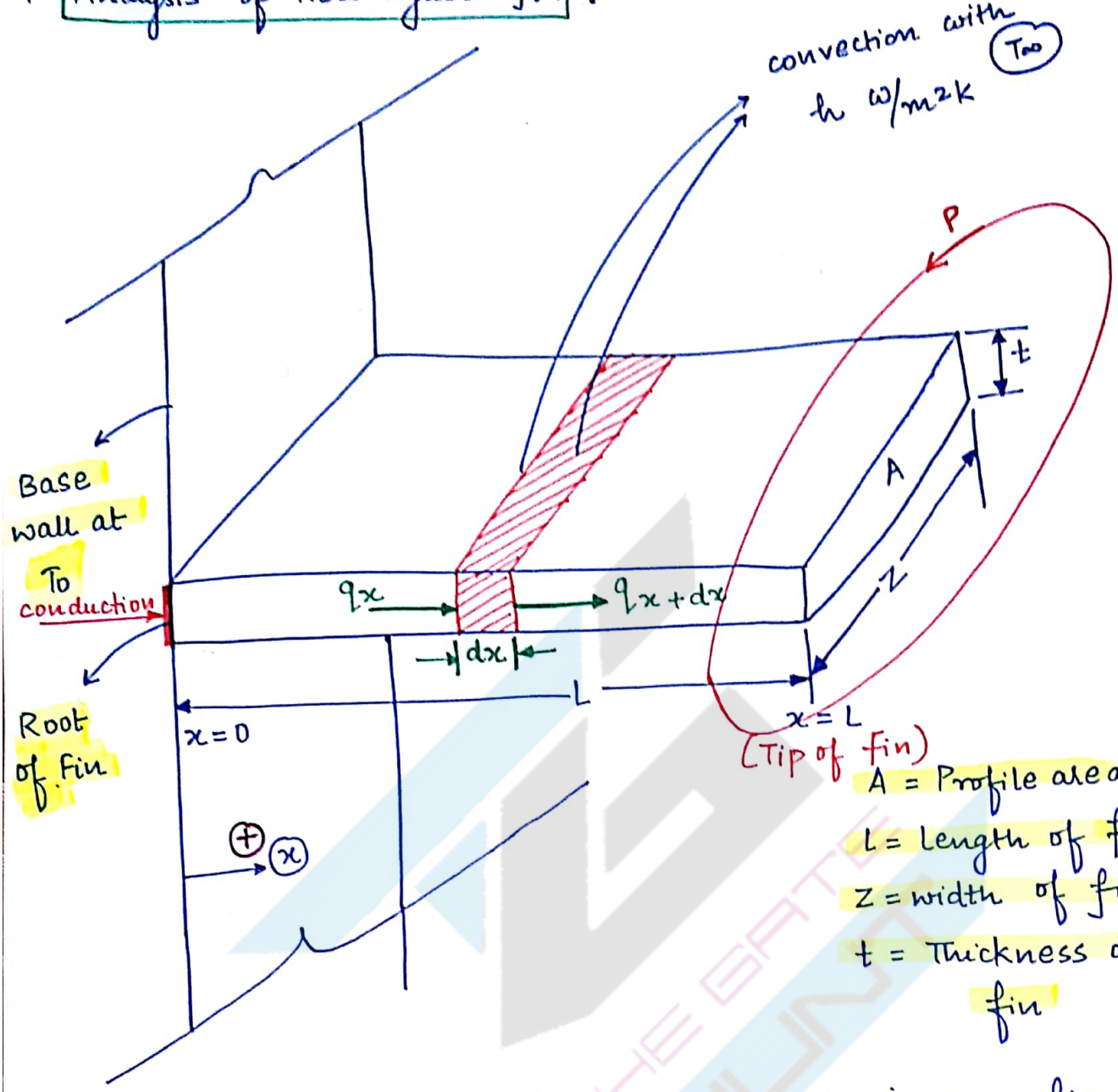

A = Profile area = Z x t

L = Length of fin

Z = width of fin

t = Thickness of fin

The actual mechanism of Heat Transfer in any fin is first heat gets conducted into the fin at its root and then while conducting along the length of the fin that is in the x- direction, it is also simultaneously convecting from the surface of the fin into the ambient fluid at T∞ with a convective heat transfer coeffi. of h w/m²K.

Objective :→ ① To get Temperature distribution within the fin that is $T = f(x)$.

② To get H.T. Rate through fin $q_{fin} = ?$

This PDF was downloaded from www.thegatehunt.com
MOHIT KUMAR CHOUKSEY
Scanned by CamScanner

Assume :- Steady state conditions of fins i.e. $T \neq f(\text{Time})$.

Consider a differential element of the fin of length dx at a distance of x from the root of fin.

Let q_x = Heat conducted into the element

$$= -KA\left(\frac{dT}{dx}\right)$$

q_{x+dx} = Heat conducted out of the element

$$= q_x + \frac{\partial}{\partial x}(q_x)\,dx.$$

Heat convected from the surface of Fin = $hPdx\,(T-T_\infty)$

where P = perimeter of fin

$= (2z+2t)$

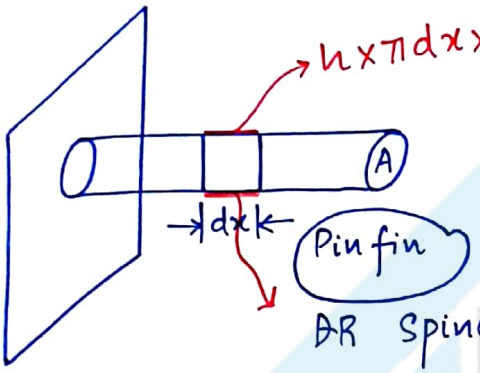

writting Energy Balance for steady state conditions of element of fin,

$$q_x = q_{x+dx} + q_{convected}$$

$$\Rightarrow q_x = q_x + \frac{\partial}{\partial x}(q_x)\,dx + hPdx\,(T-T_\infty)$$

$$\Rightarrow 0 = \frac{\partial}{\partial x}\left(-KA\frac{dT}{dx}\right)dx + hPdx\,(T-T_\infty)$$

$$\Rightarrow \frac{d^2T}{dx^2} - \frac{hP}{KA}(T-T_\infty) = 0$$

Let $(T-T_\infty) = \Theta = f(x)$

$$\Rightarrow \frac{dT}{dx} = \frac{d\Theta}{dx}$$

$$\Rightarrow \frac{d^2T}{dx^2} = \frac{d^2\Theta}{dx^2}$$

and Put $m^2 = \left(\frac{hP}{KA}\right)$

MOHIT KUMAR CHOUKSEY
This PDF was downloaded from www.thegatehunt.com
Scanned by CamScanner

$$\Rightarrow \frac{d^2\theta}{dx^2} - m^2\theta = 0$$

This is a standard format of 2nd order Differential Eqn. in θ whose solution can be given as :-

$$T - T_\infty = \theta = C_1 e^{-mx} + C_2 e^{mx}, \text{ where } m = \sqrt{\frac{hP}{KA}} \text{ /metre}$$

C_1 and C_2 are constant's of integration that are to be obtained from boundary conditions.

One common Boundary condition is :-

At $x = 0 \Longrightarrow T = T_0$ and $\theta = \theta_0 = (T_0 - T_\infty)$
(i.e. at the Root of fin)

The second Boundary condition depends upon 3 different cases of fin :-

Case I :- Fin is infinitely long (OR) Very long Fin.

Then the tempr. at the tip of the fin will be essentially that of the ambient Fluid i.e. at

at $x = \infty \Rightarrow T = T_\infty$ and hence $\theta = 0°$.

then the solution for Temperature distribution within the fin is :-

Tempr. distribution

$$\frac{T - T_\infty}{T_0 - T_\infty} = e^{-mx}$$

Heat Transfer

$$q_{fin} = \sqrt{hPKA}\,(T_0 - T_\infty) \text{ watt}$$

for any Fin case,

$q_{through\ entire\ fin}$ = Heat conducted into the Fin at its Root/base

$$= -KA\left(\frac{dT}{dx}\right)_{at\ x=0}$$

This PDF was downloaded from www.thegateHUNT.com
MOHIT KUMAR CHOUKSEY
Scanned by CamScanner

Case (2) :- Fin is Finite in length but its Tip is insulated (adiabatic Tip)

In practise, we never insulate tip of a fin, but we neglect convection heat loss from Tip.

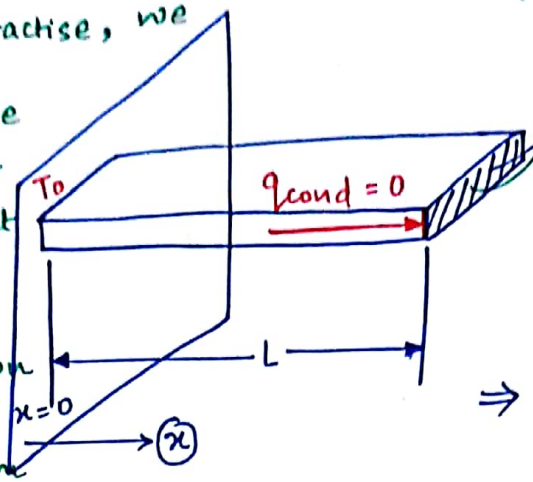

small $\leftarrow (z \times t)$

$q_{conv\ from\ Tip} = h A (T_{x=L} - T_\infty)$ (∵ product is too small)

(h small, $T_{x=L} - T_\infty$ small)

$q = 0$ convection from Tip (55)

∴ Heat conducted into the Tip of Fin = 0

$\Rightarrow -KA\left(\frac{dT}{dx}\right)_{at\ x=L} = 0$ i.e. at the insulated Tip

$\Rightarrow \left(\frac{dT}{dx}\right)_{at\ x=L} = 0 \Rightarrow \left(\frac{d\theta}{dx}\right)_{at\ x=L} = 0$

↓ 2nd boundary condition

Then the tempr. distribution within the Fin is :-

$$\left(\frac{T - T_\infty}{T_0 - T_\infty}\right) = \frac{\cosh m(L-x)}{\cosh mL}$$

Also

$$q_{fin} = \sqrt{hPKA}\ \theta = -KA\left(\frac{dT}{dx}\right)_{at\ x=0}$$

$$\downarrow$$

$$q_{fin} = \sqrt{hPKA}\ (T_0 - T_\infty) \tanh mL \text{ watt}$$

In any fin problem, if no case is mention, by default assume case II.

Case 3 :- Fin is finite in length but its Tip is Uninsulated (i.e. convection heat loss from Tip also)

Then the solution for Tempr. distribution within the Fin is :-

$$\frac{T - T_\infty}{T_0 - T_\infty} = \frac{\cosh m(L_c - x)}{\cosh mL_c}$$

This PDF was downloaded from www.thegatehunt.com
MOHIT KUMAR CHOUKSEY
Scanned by CamScanner

where L_c = connected length of fin.

= $L + t/2$ (for Rectangular fin)

= $L + d/4$ (for Pin Fin)

Also, then

$$q_{fin} = \sqrt{hPKA}\,(T_o - T_\infty)\tanh mL_c$$

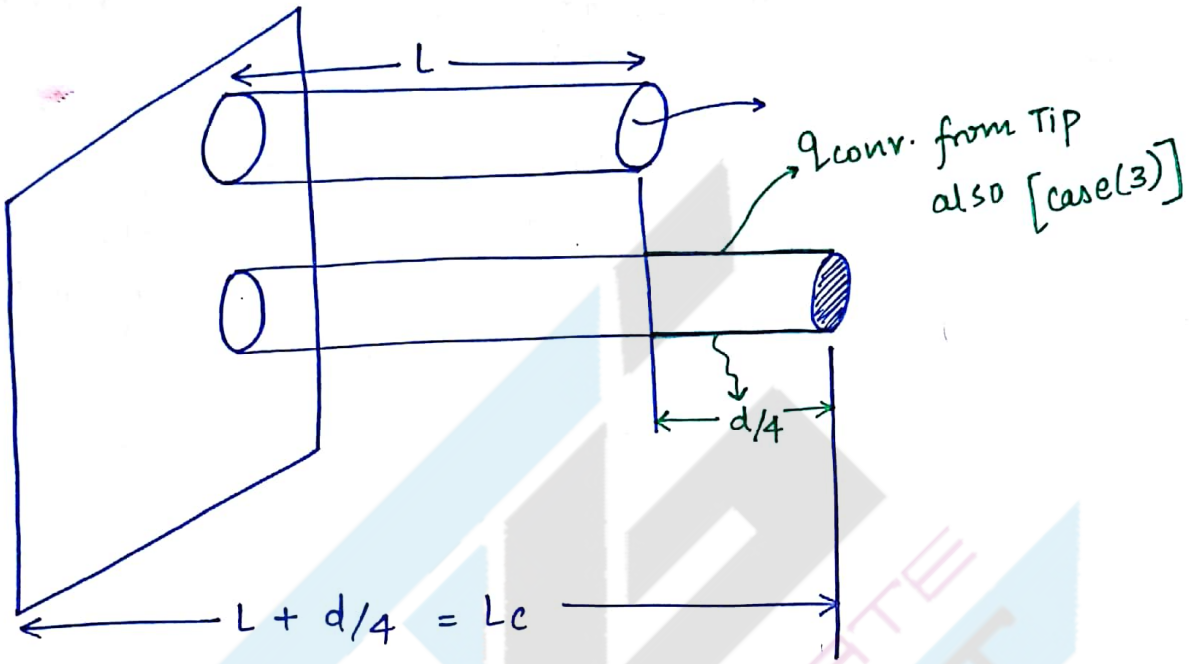

WB Q34

$d = 5mm$

$L = 100mm$

$K = 400$

$T_o = 130°C$

$T_\infty = 30°C$

$h = 40 W/m^2K$

$P =$

$m = \sqrt{\frac{hP}{KA}}$

$T_\infty = 30°C$

SIR

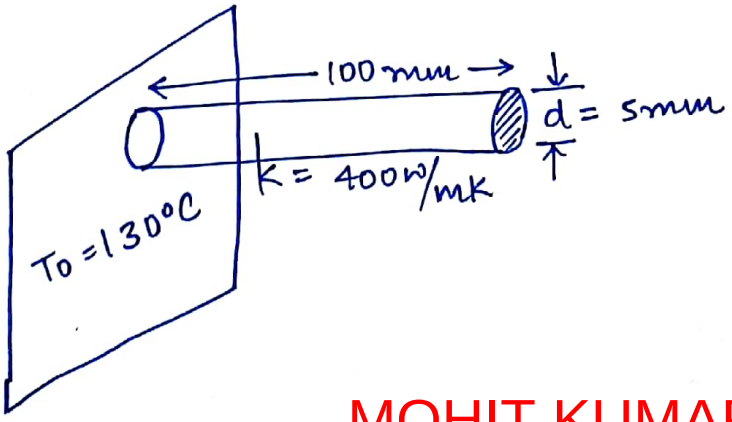

MOHIT KUMAR CHOUKSEY
This PDF was downloaded from www.thegatehunt.com
Scanned by CamScanner

Since No case is mentioned, Assume case ② i.e. insulated Tip case

$$m = \sqrt{\frac{hP}{KA}} \text{ /metre}$$

$P = \pi d =$ ☐

$A = \frac{\pi}{4} d^2 =$ ☐

$m = 8.944/\text{metre}$

$q_{fin} = \sqrt{hPKA}\,(T_o - T_\infty) \tanh mL$ watt

$= 5$ watt

Q54

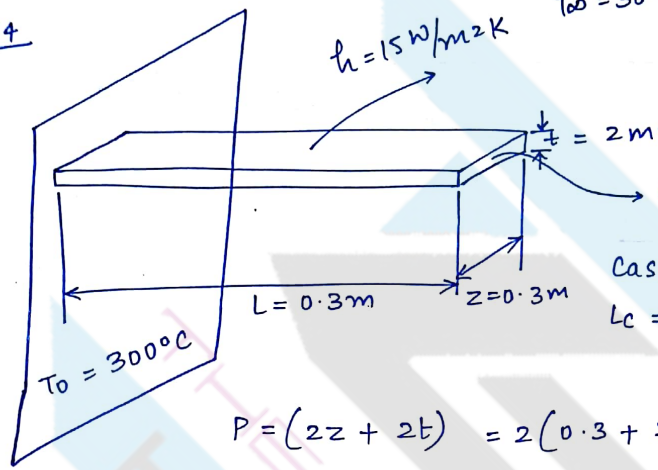

Case ③

$L_c = \left(L + t/2\right) = 0.301m$

$P = (2z + 2t) = 2(0.3 + 2/1000)$

$A = (z \times t)m^2$

$m = \sqrt{\frac{hP}{KA}} = 8.603/\text{metre}$

$$\frac{T - T_\infty}{T_o - T_\infty} = \frac{\cosh m(L_c - x)}{\cosh mL_c}$$

Put $x = 0.3m$

$T_{(at\ x = 0.3m)} =$ 70.3 °C

$q_{through\ fin} = \sqrt{hPKA}\,(T_o - T_\infty) \tanh mL_c$ watt

$= 281.1$ watt.

This PDF was downloaded from www.thegatehunt.com MOHIT KUMAR CHOUKSEY
Scanned by CamScanner

* FIN EFFICIENCY (η_{fin}) :-

fin efficiency is defined as the ratio b/w actual heat transfer rate taking place through the fin and the maxm. possible heat transfer rate that can occur through the fin that is when the entire fin surface is at its root or base temperature.

$$\eta_{fin} = \frac{q_{act}}{q_{max.possible}}$$

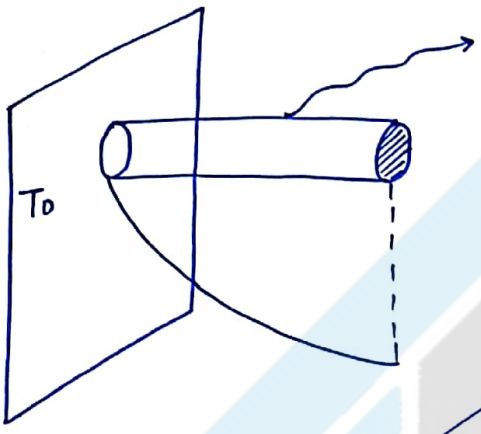

$q_{act} = \sqrt{hPKA}\,(T_o - T_\infty)\,\tanh mL$

Case (2)

MOHIT KUMAR CHOUKSEY

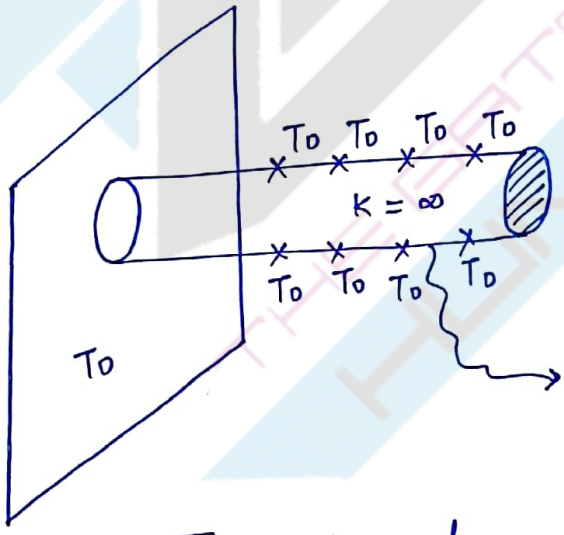

$q_{max.possible} = h(PL)(T_o - T_\infty)$

The entire fin will be at its Root Temp. (T_o) only when the Material of fin has infinite 'K'.

$$\eta_{fin} = \frac{\sqrt{hPKA}\,(T_o - T_\infty)\tanh mL}{hPL(T_o - T_\infty)}$$

case (2)

$$= \frac{\tanh mL}{\sqrt{\frac{hP}{KA}} \times L} = \frac{\tanh mL}{mL}$$

This PDF was downloaded from www.thegatehunt.com

Scanned by CamScanner

η_{fin} (case ③) $= \frac{\tanh mLc}{mLc}$ $\quad \eta_{fin} \propto \sqrt{K}$.

$= 38.18\%$

* **FIN effectiveness (ϵ_{fin})**:- It is defined as the Ratio b/w heat transfer with fin and the heat transfer rate without fin.

$$\epsilon_{fin} = \frac{q_{with}}{q_{without}}$$

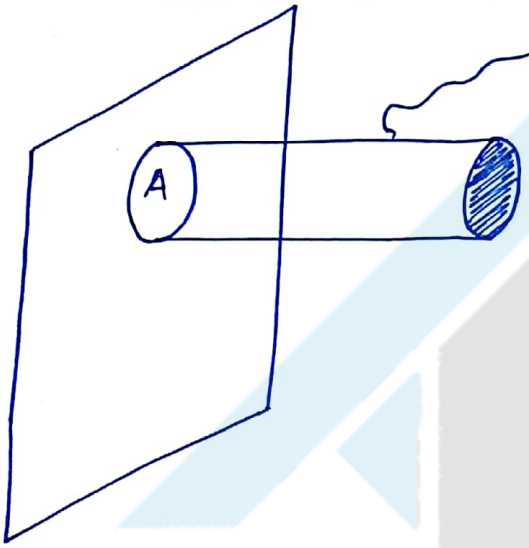

$q_{with\ fin} = \sqrt{hPKA}\,(T_0 - T_\infty)\tanh mL$

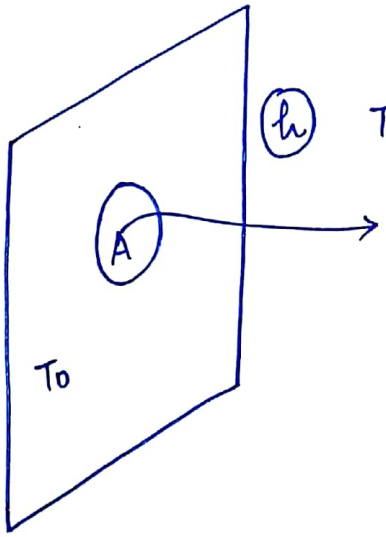

$q_{without\ fin} = hA(T_0 - T_\infty)$

$$\therefore \epsilon_{fin} = \frac{\sqrt{hPKA}\,\cancel{(T_0 - T_\infty)}\tanh mL.}{hA\,\cancel{(T_0 - T_\infty)}}$$

Case (II) insulated Tip case

$$= \frac{\tanh mL}{\sqrt{\frac{hA}{KP}}}$$

MOHIT KUMAR CHOUKSEY
This PDF was downloaded from www.thegatehunt.com
Scanned by CamScanner

ϵ_{fin} tells about how much % increase in heat transfer rate, we are able to achieve (gain) by keeping the fins as compared to the case where there is no fin. If affectiveness of fin is low then fins are not worth keeping because they donot help us much in increasing the H.T. rate.

$$\epsilon_{fin} \propto 1/\sqrt{h}$$

This is the reason why fins are never used with water or condensation heat transfer where the convective H.T. coeff^{s} are relative high which means effectiveness is low.

$$\epsilon_{fin} \propto \sqrt{\frac{P}{A}}$$

NOTE :- ∴ To have high effectiveness of fin,

Fins must be <u>thin</u> and closely spaced fins.

Ex :- Car Radiator.

$$\epsilon_{fin} \propto \sqrt{K}$$

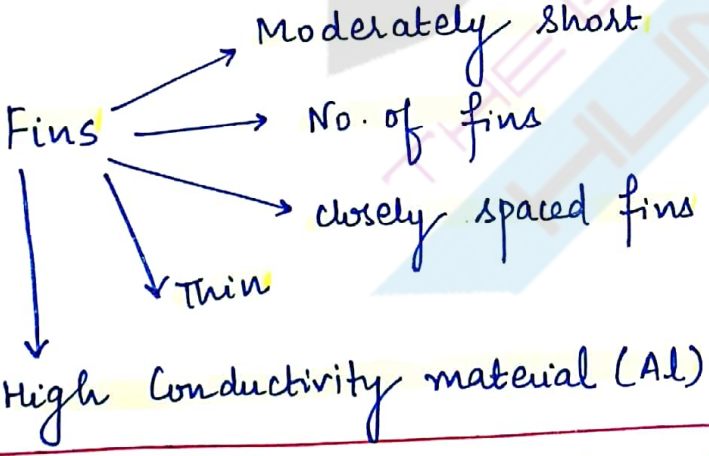

$$\text{No. of fins Regulated} = n = \frac{\text{Total Heat to be dissipated}}{\text{H.T. Rate through each fin}}$$

MOHIT KUMAR CHOUKSEY
This PDF was downloaded from www.thegatehunt.com
Scanned by CamScanner

η_{fin} infinitely long fin $= \dfrac{\sqrt{hPKA}\,(T_0 - T_\infty)}{hA\,(T_0 - T_\infty)}$

$= \sqrt{\dfrac{hP}{KA}}$

(21)

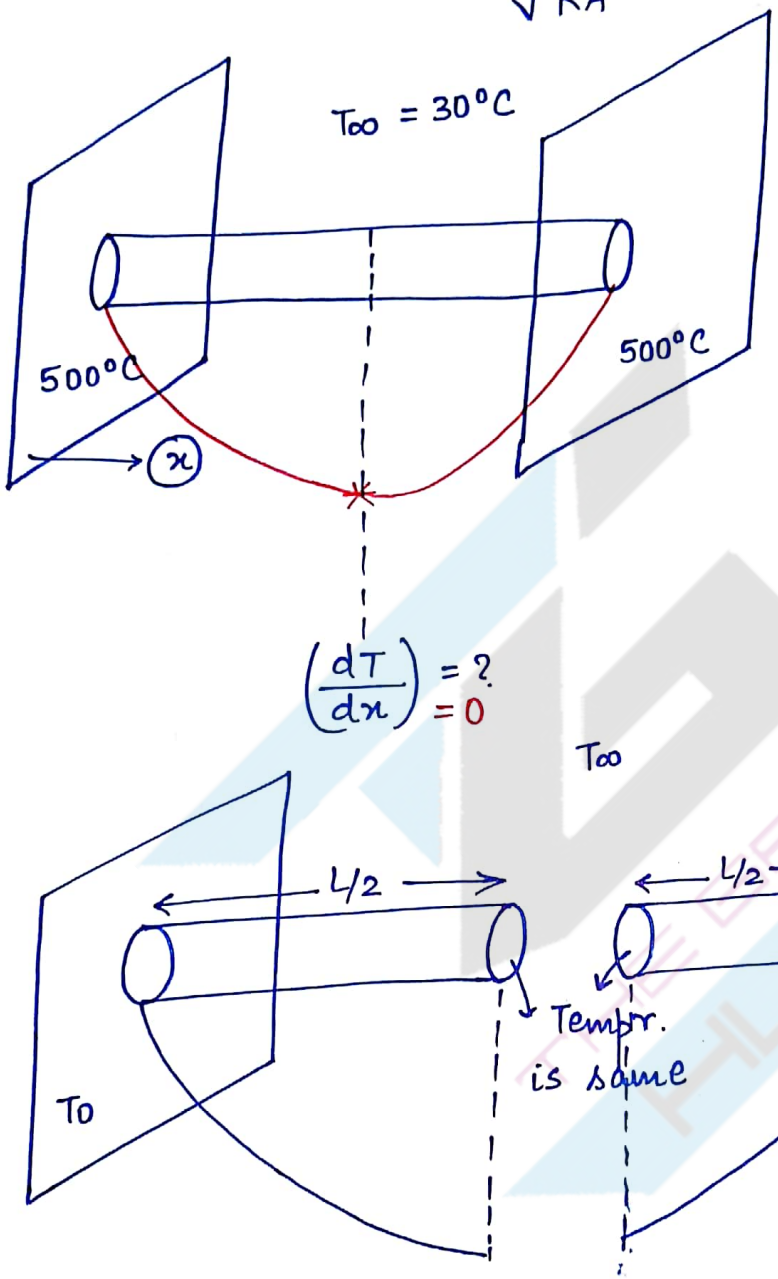

When Rods are joined No conduction H.T. b/w the ends of Rod.

$$-KA\frac{dT}{dx} = 0 \Rightarrow \frac{dT}{dx} = 0.$$

This PDF was downloaded from www.thegatehunt.com MOHIT KUMAR CHOUKSEY

Scanned by CamScanner

* Unsteady state (OR) Transient Conduction Heat Transfer :-

$T = f(\text{Time})$

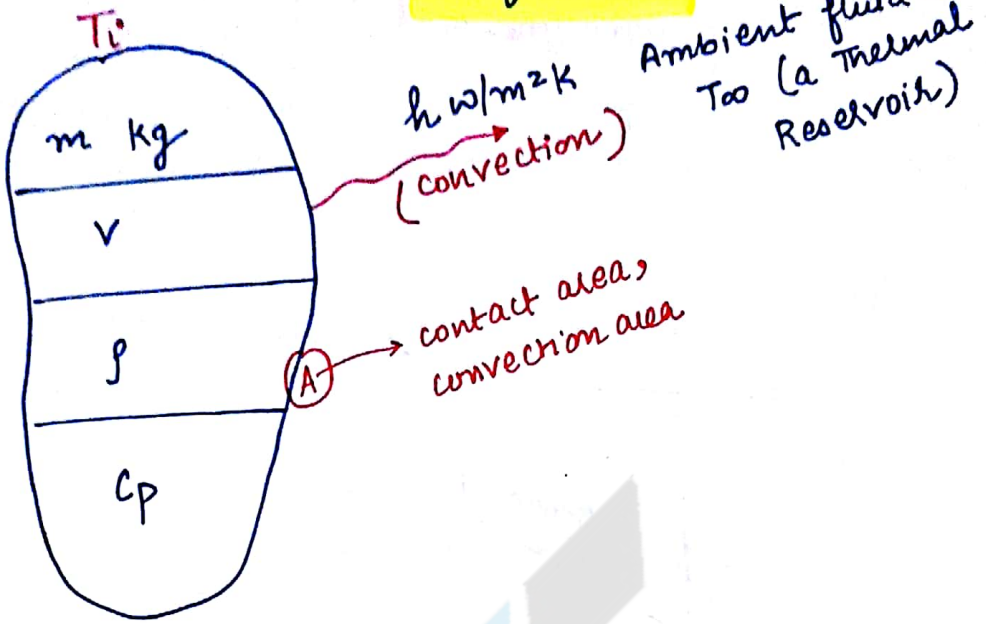

Consider a solid Body of mass 'm', volume 'V', density 'ρ', specific heat 'Cp' which is at an initial tempr. of 'T_i' (having preheated in a fulnace) is suddenly exposed to an ambient fluid at T_∞.

Since the Body keeps on loosing heat by convection to the ambient fluid with a convective Heat transfer coefficient of 'h', the internal energy of the body keeps on decreasing as the time progresses which is manifested (showing) by decrease in tempr. of the body with respect to time.

$$T = f(\tau)$$

Let T_i = Initial tempr. of body at the instant of time τ = 0sec, i.e. when the body is just exposed to fluid.

T = Tempr. of Body at any instant of Time 'τ sec', Later.

This PDF was downloaded from www.thegatehunt.com
MOHIT KUMAR CHOUKSEY
Scanned by CamScanner

Writting the energy Balance for the body at any instant of Time '$\mathcal{T}$' sec,

The Rate of convection H.T. b/w body and Fluid = The Rate of Decrease of I.E. of body w.r.t. Time.

$$\Rightarrow hA(T-T_\infty) = -mC_p\left(\frac{dT}{d\mathcal{T}}\right) \text{ Joule/sec.}$$

$$= -\rho V C_p\left(\frac{dT}{d\mathcal{T}}\right) \text{ J/sec.}$$

J/KgK

Treating all other parameters including h as constant and separating the variables time and temperature. we get

$$\int_{\mathcal{T}=0\text{sec}}^{\mathcal{T}} \left(\frac{hA}{\rho V C_p}\right) d\mathcal{T} = \int_{T_i}^{T} \frac{-dT}{(T-T_\infty)}$$

$$\Rightarrow \left(\frac{hA}{\rho V C_p}\right)\mathcal{T} = \left|\ln(T-T_\infty)\right|_{T}^{T_i} = \ln_e \frac{(T_i-T_\infty)}{(T-T_\infty)}$$

$$\Rightarrow \boxed{e^{(hA/\rho V C_p)\mathcal{T}} = \frac{(T_i-T_\infty)}{(T-T_\infty)}}$$

Note:- hence in any unsteady state H.T., the tempr. of the body changes exponentially wrt time as shown in the fig.

MOHIT KUMAR CHOUKSEY
This PDF was downloaded from www.thegatehunt.com
Scanned by CamScanner

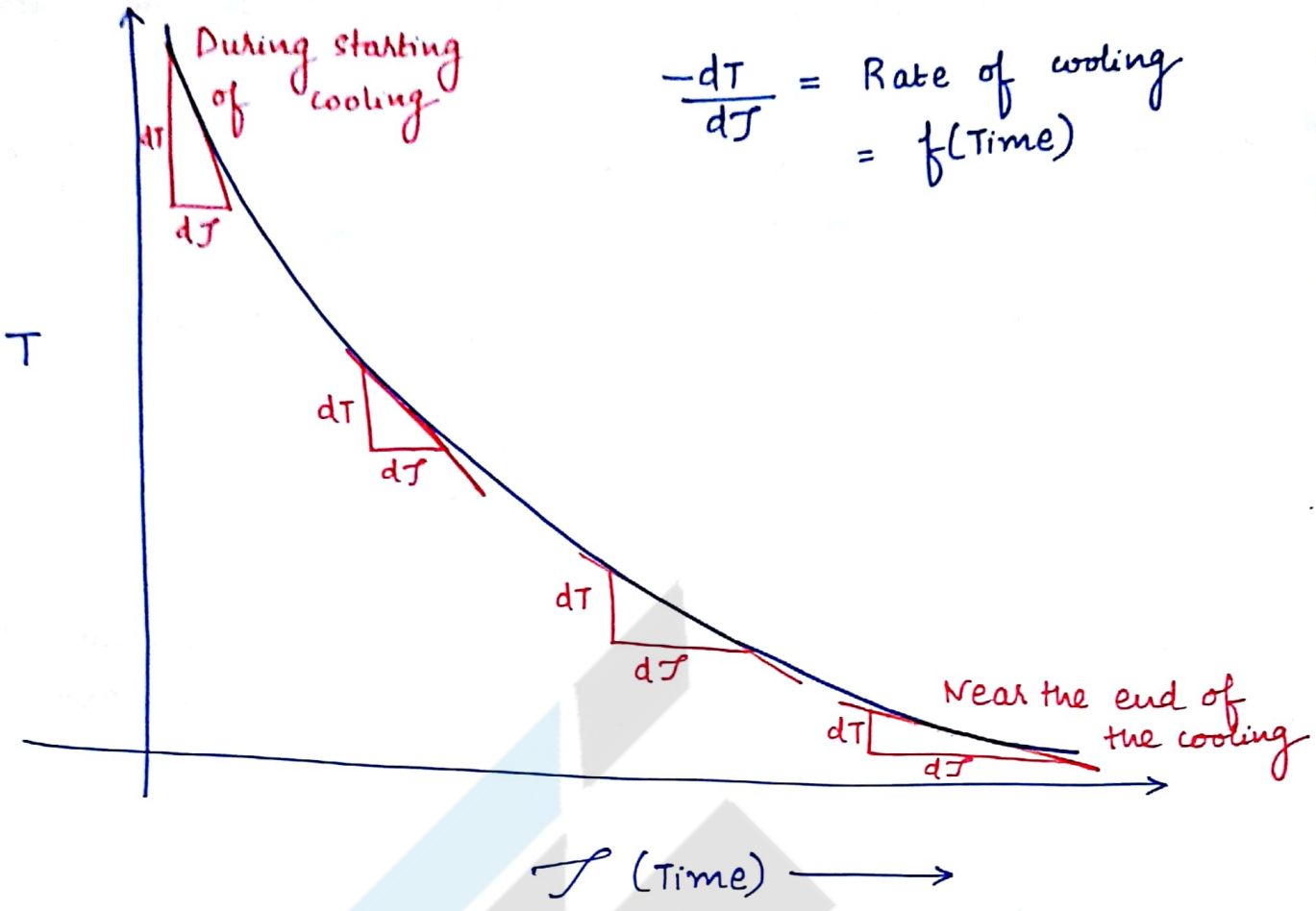

$\frac{-dT}{d\tau}$ = Rate of cooling = f(Time)

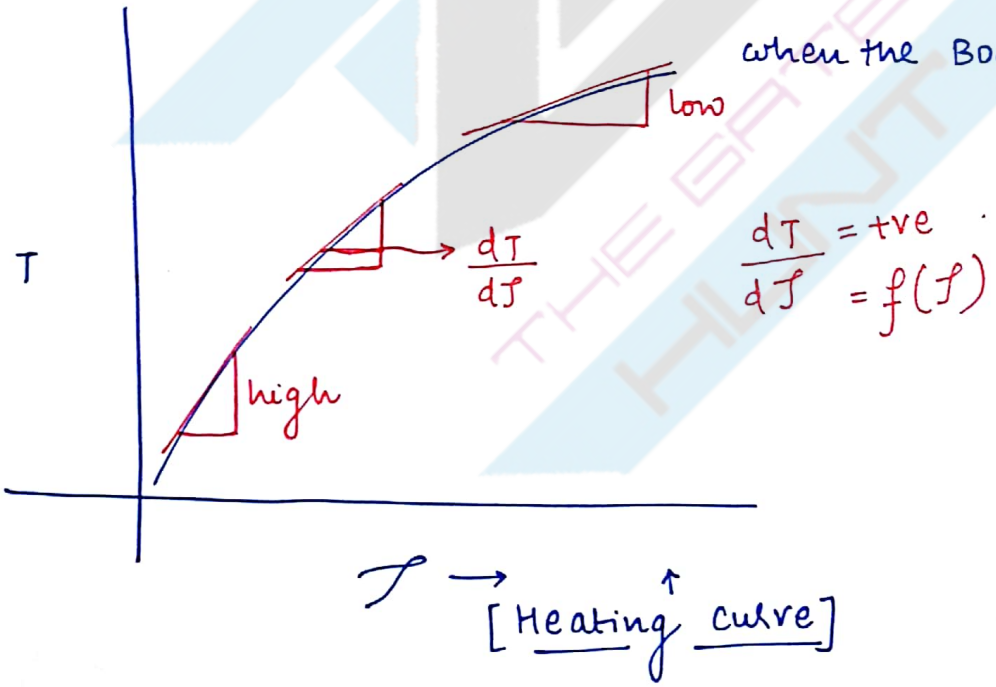

$\frac{dT}{d\tau}$ = +ve

$\frac{dT}{d\tau} = f(\tau)$

MOHIT KUMAR CHOUKSEY

Hence during unsteady state H.T., the rate of cooling/Heating of Body itself becomes a function of Time. Initially, the rate of cooling is very fast due to high convection heat transfer rate b/w body & fluid Because of large temp. diff. prevailing b/w them. But as the time progresses this rate of cooling/Heating

This PDF was downloaded from www.thegatehunt.com
Scanned by CamScanner

of body itself keeps on decreasing with time due to diminishing Heat transfer rate between them.

$$\frac{hA}{\rho V C_p} \longrightarrow sec^{-1}$$

$\therefore \left(\frac{\rho V C_p}{hA}\right)$ has got the units of sec. This group is called Time constant of Body.

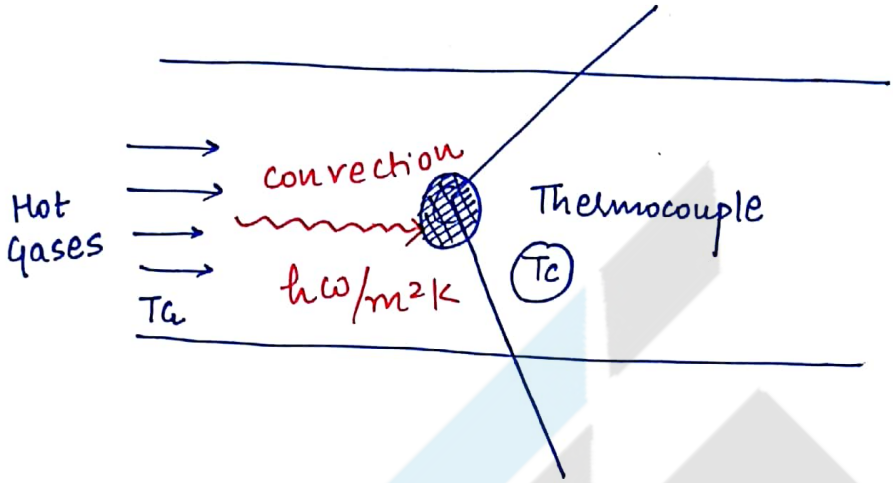

Time constant of Thermocouple bead because is very small (2 to 3sec)

① $V/A = \frac{4/3\,\pi R^3}{4\pi R^2} = R/3$ (Size of Bead is very small)

② Heat Capacity of Material is small.

③ 'h' value is high.

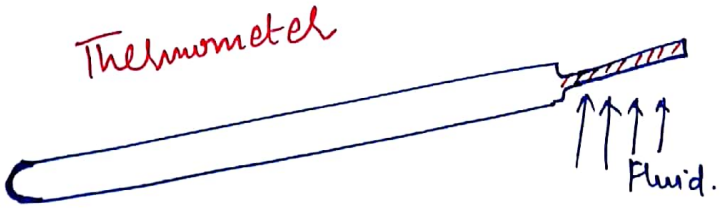

MOHIT KUMAR CHOUKSEY

In the above analysis done, it is assumed that the tempr. of the Body is uniform throughout its mass at any instant of time i.e. Internal tempr. gradients within the Body are neglected.

This PDF was downloaded from www.thegatehunt.com
Scanned by CamScanner

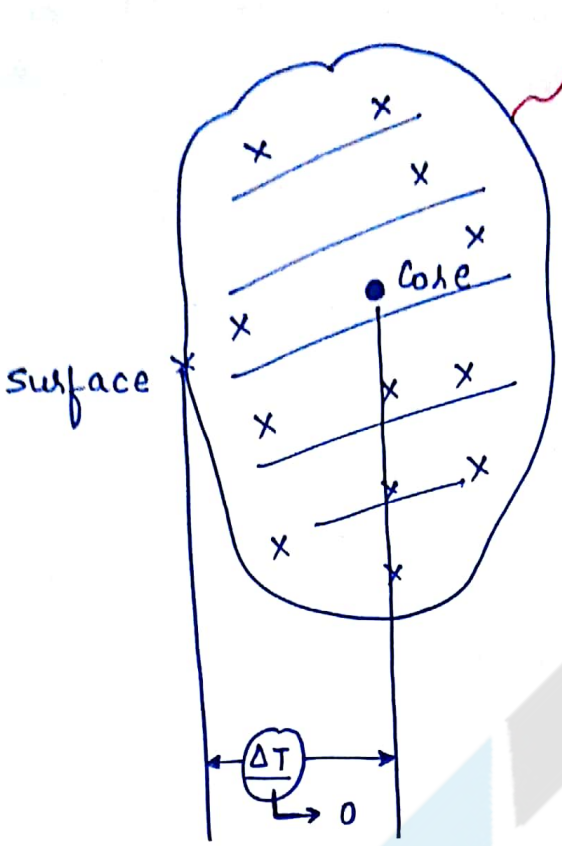

$T \neq f(\text{space})$

but

$T = f(\text{Time})$

Such analysis is called Lumped Heat Capacity Analysis.

* **Criteria for lumped Heat analysis :-**

Biot No < 0.1 where

$$\text{Biot No.} = \frac{hs}{K_{solid}}$$

$$s = \frac{\text{Volume of Body}}{\text{surface area of Body}} = \frac{V}{A}$$

For spherical Body, $s = \frac{4/3\,\pi R^3}{4\pi R^2} = \left(\frac{R}{3}\right)$.

$$\text{Biot No.} = \frac{s/KA}{1/hA} = \frac{\text{Internal conductive Resistance offered By Body}}{\text{External convective No.}}$$

$$= \frac{ICR}{ECR}.$$

MOHIT KUMAR CHOUKSEY
This PDF was downloaded from www.thegatehunt.com
Scanned by CamScanner

NOTE:- Low Biot No. values signifies that the body offers very little conductive resistance for any internal H.T. within the Body as compared to surface convective resistance thereby leveling the tempr. differences that may exist between any two locations within the body.

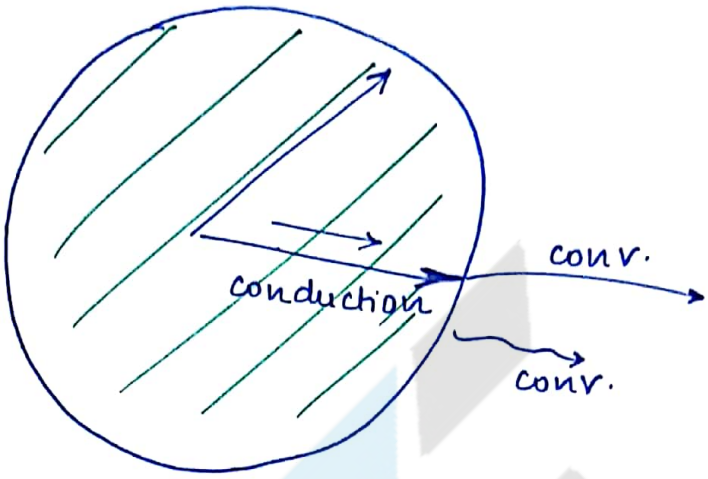

WB
Q36

$\frac{9.04 \times 10^{-7}}{4.52 \times 10^{-4}}$

$\frac{2.15 \times 10^{-3}\ m^2}{20}$

$\frac{1}{s}$

0.00053

Sil

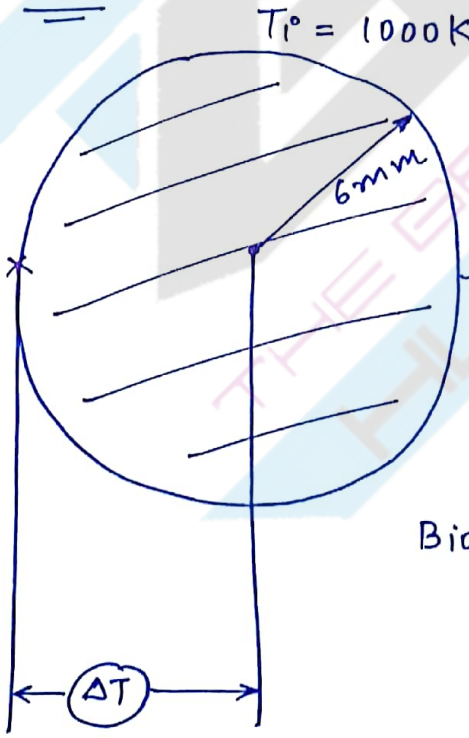

$(S_{sph}) = R/3$

$\text{Biot No.} = \frac{hs}{K}$

$= 5/20 \times 6/1000 \times 1/3$

$= 0.0005$

$<< 0.1$

ICR <<< ECR

↓ cond ↓ conv.

(d) ✓

MOHIT KUMAR CHOUKSEY
This PDF was downloaded from www.thegatehunt.com
Scanned by CamScanner

(53) $d = 10\,mm$ $\quad T_i = 1000\,K$ $\quad T_\infty = 300\,K$ $\quad T_0 = 350\,K$ $\quad h = 1000\ W/m^2K$ $\quad k = 40\ W/mK$

$\tau = 16s$

$$e^{(hA/\rho V c_p)\tau} = \left(\frac{T_i - T_\infty}{T - T_\infty}\right)$$

SIR Since small steel ball,

Biot No. < 0.1

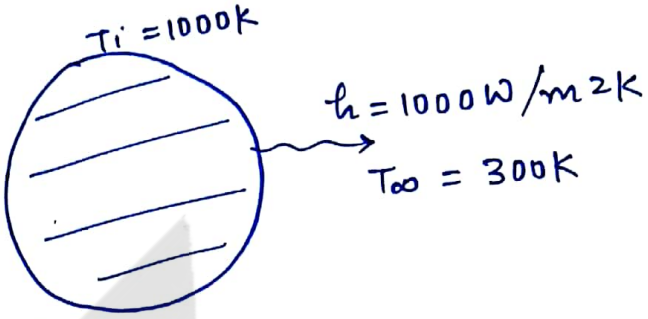

$$\left(\frac{hA}{\rho V c_p}\right) \times \tau = \ln\left(\frac{T_i - T_\infty}{T - T_\infty}\right) = \ln\left(\frac{1000 - 300}{350 - 300}\right)$$

($\frac{1}{\text{Time constant}}$)

$$\Rightarrow 1/16 \times \tau = \ln\left(\frac{700}{50}\right) \Rightarrow \text{Time taken} = 42.2\,sec$$

(15)

$$\frac{4.83 \times 10^{-8}}{3.87 \times 10^{-4}} = \ln\left(\frac{1030 - 30}{T - 30}\right)$$

$$1.00T - 30T = 1030 - 30$$

SIR

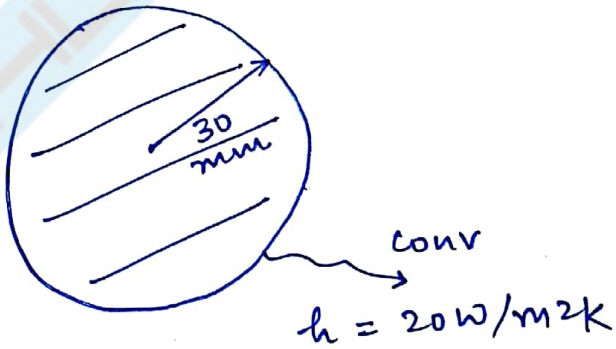

Biot No. < 0.1 ($\because$ small steel Body)

MOHIT KUMAR CHOUKSEY
This PDF was downloaded from www.thegatehunt.com
Scanned by CamScanner

$$\left(\frac{hA}{\rho VC_p}\right) \times \tau = \frac{\ln (T_i - T_\infty)}{T - T_\infty} = \ln \frac{(1030 - 30)}{(430 - 30)}$$

Put $A/V = (3/R) \Rightarrow \tau = 2144 \text{ sec}$

Time taken

(52) $r = \frac{0.01}{2 \times 10.00}$ m

$L = 0.2$ m

$T_i = 750°C$

$h = 250 \text{ W/m}^2\text{K}$

$\rho = 7801 \text{ kg/m}^3$

$C = 473 \text{ J/kg K}$

$K = 43 \text{ W/m K}$

$T_\infty = 100°C$

$T = 300°C$

MOHIT KUMAR CHOUKSEY

SIR

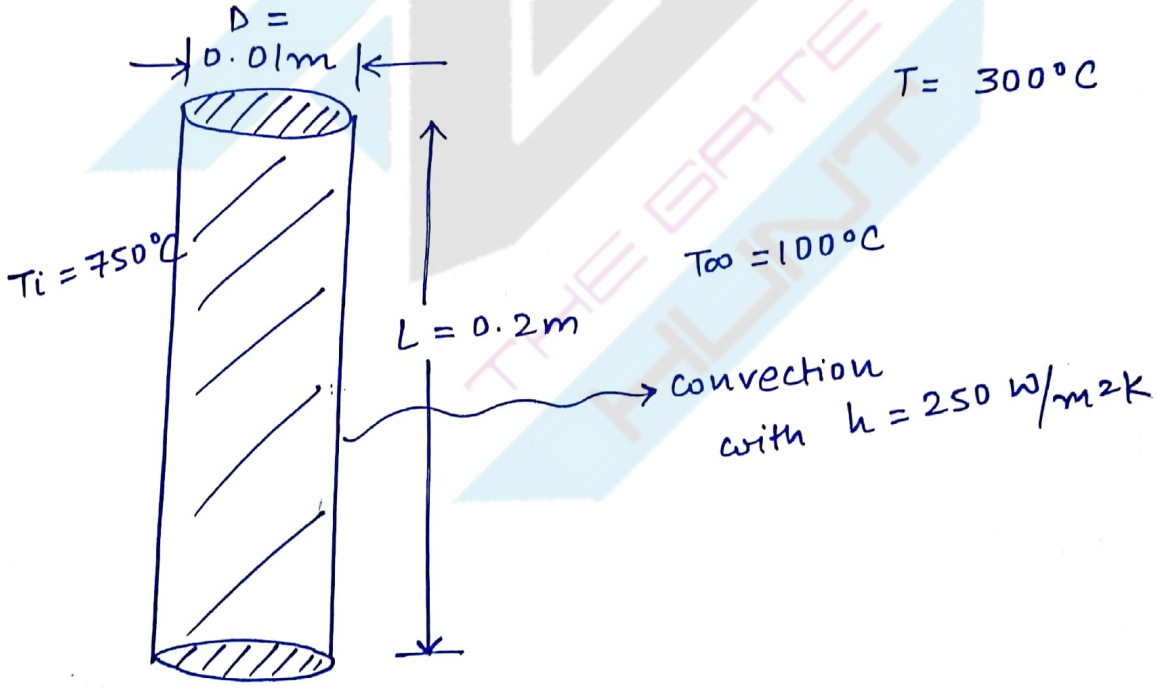

since slender steel Rod, Biot No. < 0.1

$$\left(\frac{hA}{\rho VC_p}\right)\tau = \ln\left(\frac{T_i - T_\infty}{T - T_\infty}\right) = \ln\left(\frac{750 - 100}{300 - 100}\right) \quad \tau = \text{time taken} = 42.4 \text{ sec}$$

$$A/V = \left[\frac{2(\pi/4)D^2 + \pi DL}{\pi/4 D^2 L}\right]$$

This PDF was downloaded from www.thegatehunt.com

Scanned by CamScanner

(39)

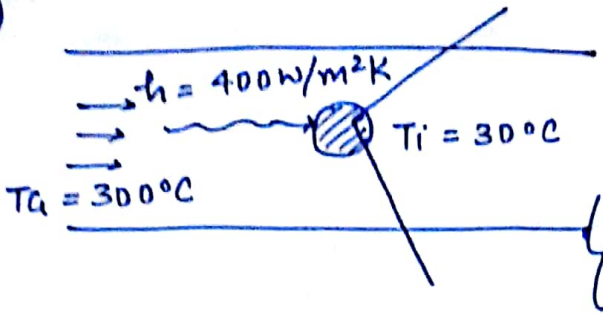

Thermocouple is a very small Body (i.e. Biot No < 0.1)

$$\left(\frac{hA}{\rho V C_p}\right) t = \ln\frac{(T_i - T_\infty)}{(T - T_\infty)} = \ln\frac{(30-300)}{(298-300)}$$

Put $\frac{A}{V} = 3/R \Rightarrow t$ = Time taken = 4.9 sec

(16) $d = 5\,mm \quad r = 2.5\,mm$

$T_i = 500K$

$T_\infty = 300K$

$K = 400$

$\rho = 9000$

$C = 385$

$h = 250$

$$\frac{\rho V C_p}{hA} = 7.55$$

$$\frac{hA}{\rho V C_p} \quad 11.55 = \frac{500 - 300}{T - 300}$$

$$0.086 \times T - 300 = 500 - 300$$

SIR

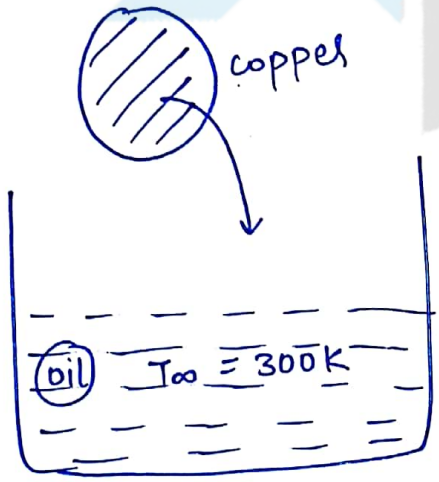

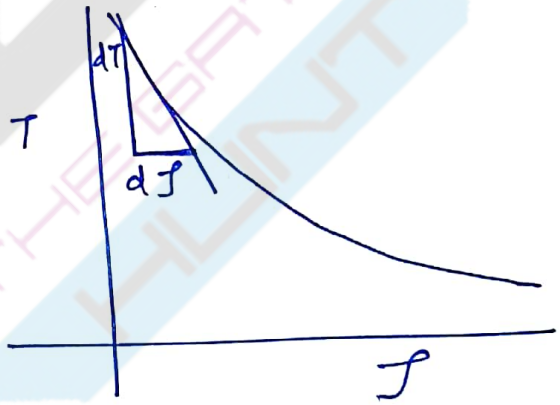

The Rate of fall of tempr. of ball at the begining of cooling $= \left(\frac{dT}{dt}\right)_{at\ t = 0\,sec}$

MOHIT KUMAR CHOUKSEY

This PDF was downloaded from www.thegatehunt.com

Scanned by CamScanner

writing the energy balance for the body, at the very beginning of cooling.

The Rate of convection H.T. b/w body and oil bath = The Rate of decrease of IE of body wrt time

$$hA(T_i - T_\infty) = -\rho V C_p \left(\frac{dT}{d\tau}\right)_{at\ \tau = 0sec} \ J/sec$$

$$\left(\frac{dT}{d\tau}\right)_{at\ \tau = 0sec} = 17.3\ K/sec$$

Time	Temp	
0 sec →	500K	} 17.3
1 sec →	482.7K	} 17.3
2 sec →		

Put $\frac{A}{V} = 3/R$

Q57 $h = 400$, $k = 20$, $C = 200$, $\rho = 8500$

$\tau = 1sec$

SIR

$$\frac{\rho V C_p}{hA} = 1\ sec$$

Put $\frac{V}{A} = R/3$

$R = 0.705\ mm$ $D = 1.4\ mm$

Q58B

(1) (c) ✓ (clausius statement of IInd law)

(3) (d) ✓

(4) (b) ✓ $\alpha = \left(\frac{k}{\rho C_p}\right)$

(7) (a)

(8) (d)

(9) c ($k_{solid\ ice} > k_{water} > k_{water\ vapour}$)

(10) a ($\because \left(\frac{dT}{dx}\right)_{in\ (1)}$ is higher)

(11) c

(12) d

MOHIT KUMAR CHOUKSEY
This PDF was downloaded from www.thegatehunt.com
Scanned by CamScanner

(13)

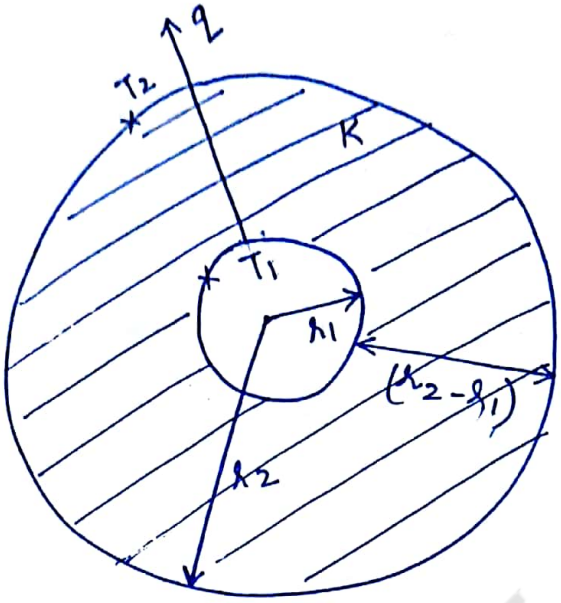

Thermally = equivalent

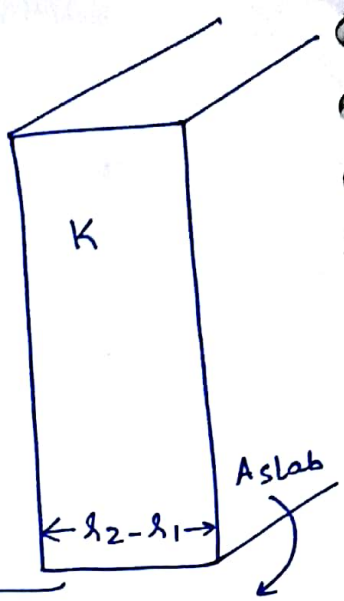

Hollow sphere

$$(R_{th}) = \frac{r_2 - r_1}{4\pi K r_1 r_2}$$

Equivalent mean area of hollow sphere = Am

(Slab)

$$R_{th} = \frac{r_2 - r_1}{K A_m}$$

The Hollow sphere & slab are said to be thermally equivalent only if both of them are having same total thickness and offer the same thermal Resistance.

Equating R_{th},

$$\frac{r_2 - r_1}{4\pi K r_1 r_2} = \frac{r_2 - r_1}{K A_m}$$

$$A_m = 4\pi r_1 r_2$$

$A_m = 4m^2$

$4\pi r_1^2 = A_1 = 2m^2$

$r_1 =$ ☐ m

$4\pi r_2^2 = A_2 = 8m^2$

$r_2 =$ ☐ m

(22) b ✓

This PDF was downloaded from www.thegatehunt.com
MOHIT KUMAR CHOUKSEY
Scanned by CamScanner

(24) K varies linearly w.r.t. Temp. i.e. we can take (73)

$$T_{mean} = \frac{25+15}{2} = 20\ W/mK$$

$$\therefore q/A = \frac{K_{mean}\,\Delta T}{b}$$

$$= \left[\frac{20 \times (300-200)}{0.5}\right]$$

$$= 4000\ W/m^2$$

$$K = aT + c$$

$$25 = a(300) + c$$

$$15 = a(200) + c$$

MOHIT KUMAR CHOUKSEY

$$q/A = K\frac{dT}{dx}$$

$$\int_{x=0}^{b} q/A\, dx = \int_{T_1}^{T_2} (aT+c)\, dT$$

$$q/A = 1/b \left[\frac{a(T_1^2 - T_2^2)}{2} + c(T_1 - T_2)\right]$$

$b = 0.5m$

$$= 4000\ W/m^2$$

(25) $R_{th} = b/KA = \frac{0.1}{200 \times 5} = 10^{-4}\ K/watt$

(28) a

(31)

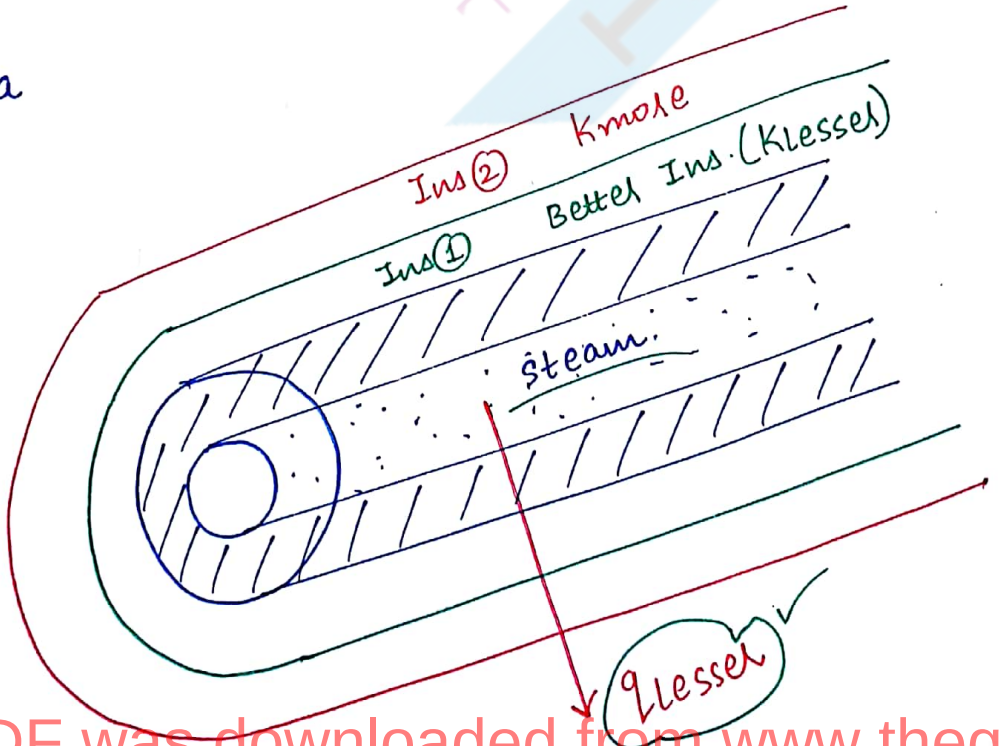

This PDF was downloaded from www.thegatehunt.com
Scanned by CamScanner

To have lesser H.T. Rate between steam pipe and ambient, Always keep better Insulator having lesser 'k' value immediately next to pipe.

Reason → In such arrangement $(R_{Th})_{Total}$ is higher.

(a) ✓

Q38 During Unsteady state H.T.,

If Biot No. < 0.1

$T \neq f(\text{space})$ but $T = f(\text{Time})$

In Case if Biot No. > 0.1

Then $T = f(\text{Time, space (or) location})$

i.e. we observe Different locations of body at a given instant of time temp's at different

(i.e. Tempr. gradients appear)

∴ To get temperature of body at any particular location at a given instant of Time, Heisler charts must be used.

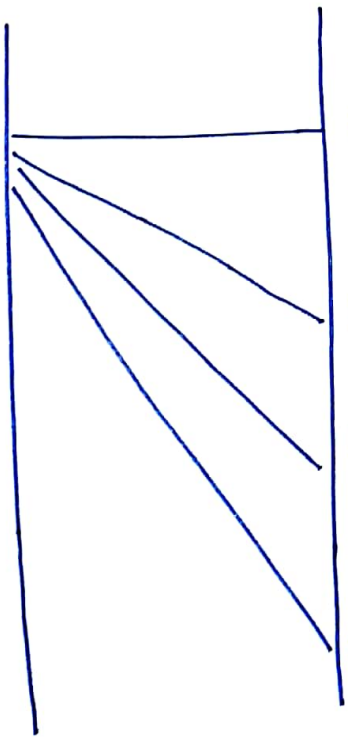

Put Biot No. = 1

⇒ ICR = ECR
↓ ↓
cond. conv.

i.e. Both Internal conductive Resistance and External convective Resistance become of equal significance.

This PDF was downloaded from MOHIT KUMAR CHOUKSEY.com
MOHIT KUMAR CHOUKSEY
Scanned by CamScanner

(44) $\frac{\ln(R_2/R_1)}{2\pi KL}$

(45) b

(58)

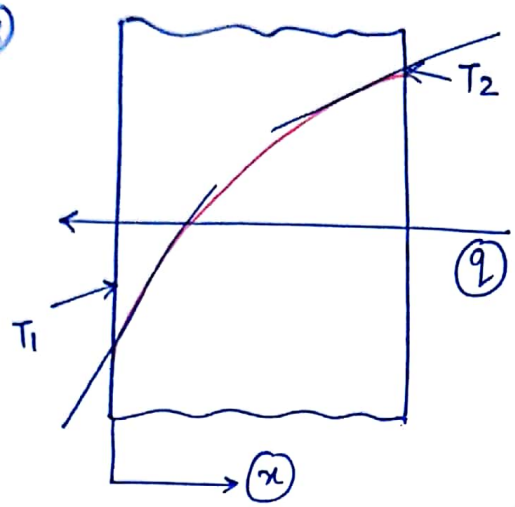

$T_2 > T_1$

(75)

Fourier's law of cond :-

$$q = KA\frac{dT}{dx}$$

$$q/A = (K_0 + bT)\frac{dT}{dx}$$

But $q = C$ ($\because$ steady state H.T.)

$A = C$ ($\because$ slab) $\therefore$ As $x \uparrow \Rightarrow T \uparrow \Rightarrow (K_0 + bT) \uparrow \Rightarrow \frac{dT}{dx} \downarrow$

$\therefore \frac{q}{A} = $ constant

MOHIT KUMAR CHOUKSEY

This PDF was downloaded from www.thegatehunt.com

Scanned by CamScanner