Manometer:

- Manometer is an improved form of a piezometer tube. With its help we can measure comparatively high pressures and negative pressure also. Following are few types of manometers.

1. Simple Manometer
2. Micro-manometer
3. Differential manometer
4. Inverted differential manometer

Simple Manometer:

- It consists of a tube bent in U-Shape, one end of which is attached to the gauge point and the other is open to the atmosphere.
- Mercury is used in the bent tube which is 13.6 times heavier than water. Therefore it is suitable for measuring high pressure as well.

Procedure:

1. Consider a simple Manometer connected to a pipe containing a light liquid under high pressure. The high pressure in the pipe will force the mercury in the left limb of U-tube to move downward, corresponding the rise of mercury in the right limb.

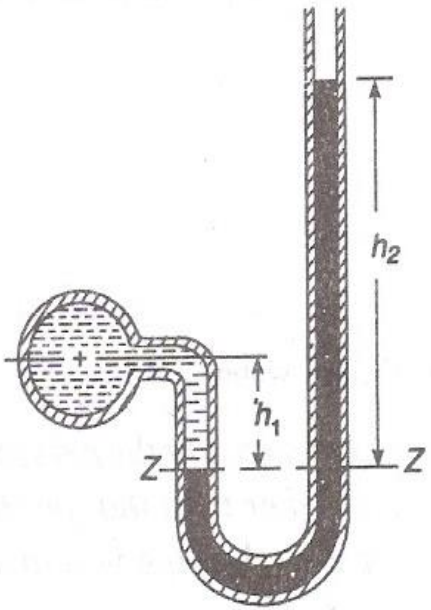

(a) Positive pressure

-

Simple Manometer:

2. The horizontal surface, at which the heavy and light liquid meet in the left limb, is known as datum line.

   Let h1 = height of light liquid in the left limb above datum.

   h2 = height of heavy liquid in the right limb above datum.

   h= Pressure in the pipe, expressed in terms of head of water.

   s1=Sp. Gravity of light liquid.

   s2=Sp. Gravity of heavy liquid.

3. Pressure in left limb above datum = h +s1h1
4. Pressure in right limb above datum = s2h2
5. Since the pressure is both limbs is equal So,

   h +s1h1 = s2h2

   h= (s2h2 - s1h1)

Simple Manometer:

To measure negative pressure:

In this case negative pressure will suck the light liquid which will pull up the mercury in the left limb of U-tube. Correspondingly fall of liquid in the right limb.

6. Pressure in left limb above datum = h +s1h1 + s2h2
7. Pressure in right limb = 0
8. Equating, we get

   h = -s1h1-s2h2 = -(s1h1+s2h2)

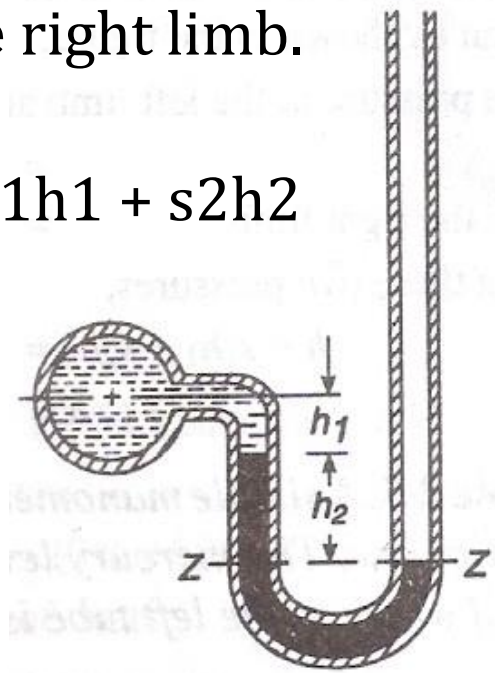

(b) Negative pressure

Example

A simple manometer containing mercury is used to measure the pressure of water flowing in a pipeline. The mercury level in the open tube is 60mm higher than that on the left tube. If the height of water in the left tube is 50mm, determine the pressure in the pipe in terms of head of water.

Solution:

Pressure head in the left limb above Z - Z

$$= h + s_1 h_1 = h + (1x50)$$

$$= h + 50 \text{ mm}$$

Pressure head in the right limb above Z - Z

$$= s_2 h_2 = 13.6x60$$

$$= 816 \text{ mm}$$

Equating;

$$h + 50 = 816$$

$$h = 766 \text{ mm}$$

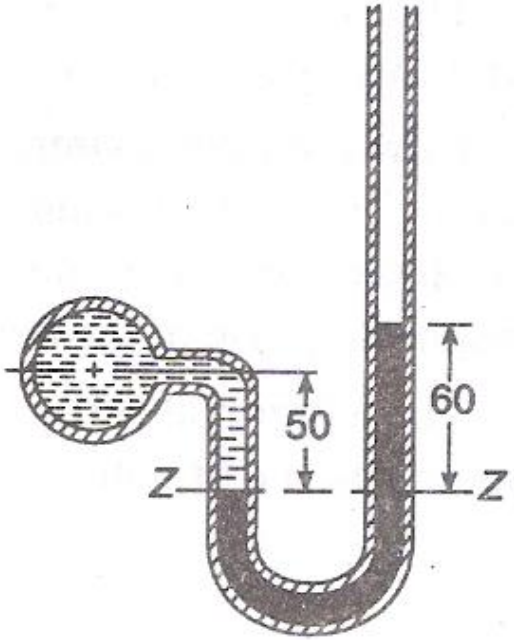

Example

A simple manometer containing mercury was used to find the negative pressure in pipe containing water. The right limb of the manometer was open to atmosphere. Find the negative pressure, below the atmosphere in the pipe.

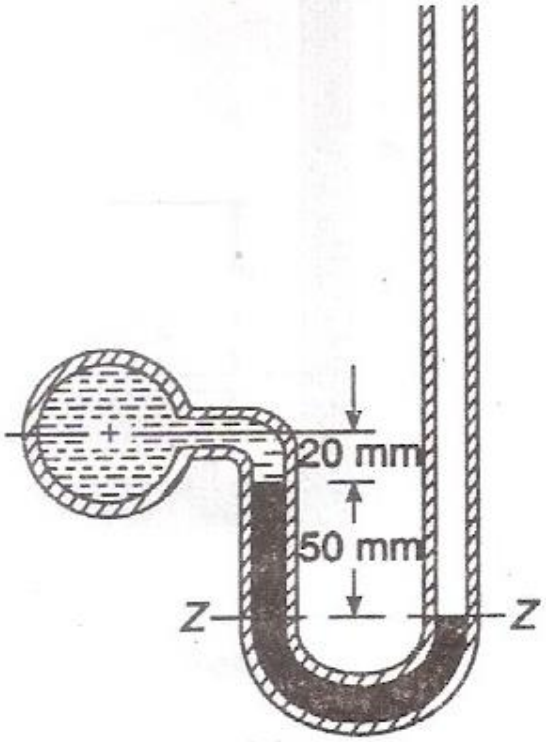

Solution:

Pressure head in the left limb above Z - Z

$$= h + s_1 h_1 + s_2 h_2 = h + (1x50) + (13.6x50)$$

$$= h + 700 \text{ mm}$$

Pressure head in the right limb above Z - Z

$$= 0$$

Equating;

$$h + 700 = 0$$

$$h = -700 \text{ mm} = -7\text{m}$$

Gauge pressure in the pipe $= p = \gamma h$

$$9.81x(-7) = -68.67\text{kN/m}^2$$

$$= -68.67\text{kPa}$$

$$= 68.67\text{kPa (Vacuum)}$$

Example

Figure shows a conical vessel having its outlet at A to which U tube manometer is connected. The reading of the manometer given in figure shows when the vessel is empty. Find the reading of the manometer when the vessel is completely filled with water.

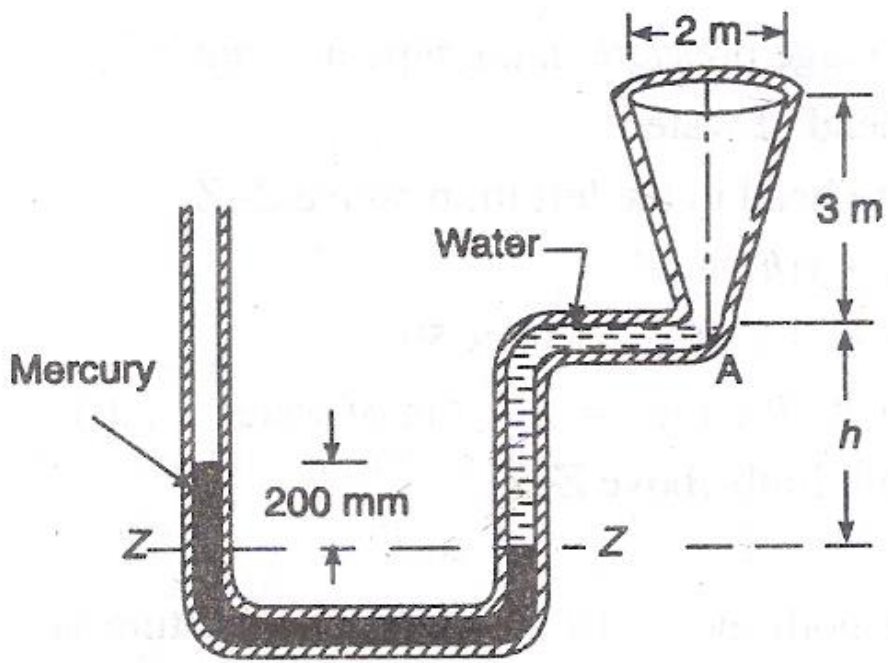

Solution:

$h_2 = 200mm = 0.2m$

$s_1 = 1$ and $s_2 = 13.6$

Let h = Pressure head of mercury in terms on head of water.

1. Let us consider the vessel is to be empty and Z - Z be the datum line.

Pressure head in the right limb above Z - Z

$= s_1 h_1 = 1xh = h$

Pressure head in the left limb above Z - Z

$= s_2 h_2 = 13.6x0.2 = 2.72m$

Equating; $h = 2.72m$

Solution:

2. Consider the vessel to be completely filled with water.

As a result, let the mercury level goes down by x meters in the right limb, and the mercury level go up by the same amount in the left limb.

Therefore total height of water in the right limb

$$= x + h + 3 = x + 2.72 + 3 = x + 5.72$$

Pressure head in the right limb $= 1(x + 5.72) = x + 5.72$

We know that manometer reading in this case:

$$= 0.2 + 2x$$

Pressure head in the left limb

$$= 13.6\,(0.2 + 2x) = 2.72 + 27.2x$$

Equating the pressures:

$$x + 5.72 = 2.72 + 27.2x$$

$$x = 0.115\text{m}$$

and manometer reading $= 0.2 + (2x0.115) = 0.43\text{m} = 430\text{ mm}$

Differential Manometer:

- It is a device used for measuring the difference of pressures, between the two points in a pipe, on in two different pipes.
- It consists of U-tube containing a heavy liquid (mercury) whose ends are connected to the points, for which the pressure is to be found out.

Procedure:

- Let us take the horizontal surface Z-Z, at which heavy liquid and light liquid meet in the left limb, as datum line.
- Let, h=Difference of levels (also known as differential manomter reading)

  ha, hb= Pressure head in pipe A and B, respectively.

  s1, s2= Sp. Gravity of light and heavy liquid respectively.

Differential Manometer:

1. Consider figure (a):
2. Pressure head in the left limb above Z-Z = ha+s1(H+h)= ha+s1H+s1h

3. Pressure head in the right limb above Z-Z = hb+s1H+s2h
4. Equating we get,

   ha+s1H+s1h = hb+s1H+s2h

   ha-hb=s2h-s1h = h(s2-s1)

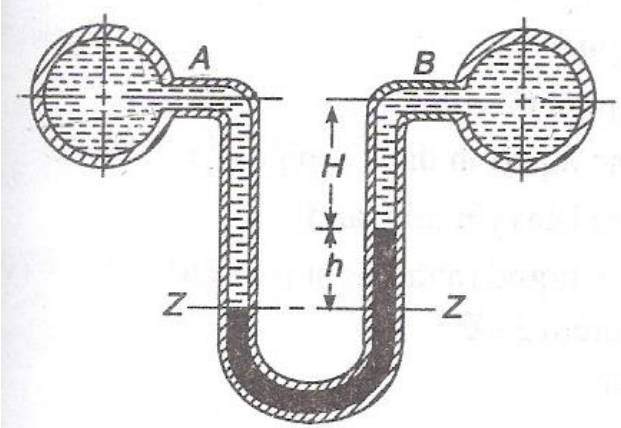

(*a*) *A* and *B* at the same level and containing same liquid.

Differential Manometer:

Two pipes at different levels:

1. Pressure head in the left limb above Z-Z = ha+s1h1
2. Pressure head in the right limb above Z-Z = s2h2+s3h3+hb
3. Equating we get,

ha+s1h1 = s2h2+s3h3+hb

Where;

h1= Height of liquid in left limb

h2= Difference of levels of the heavy liquid in the right and left limb (reading of differential manometer).

h3= Height of liquid in right limb

s1,s2,s3 = Sp. Gravity of left pipe liquid, heavy liquid, right pipe liquid, respectively.

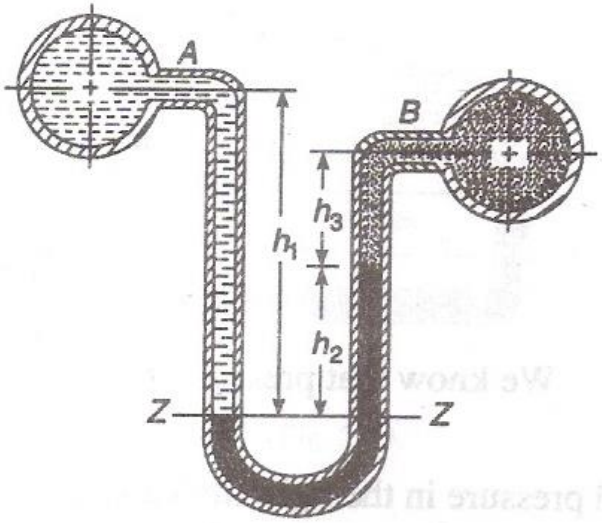

(*b*) *A* and *B* at different levels and containing different liquids.

Example

A U-tube differential manometer connects two pressure pipes A and B. The pipe A contains carbon Tetrachloride having a Sp. Gravity 1.6 under a pressure of 120 kPa. The pipe B contains oil of Sp. Gravity 0.8 under a pressure of 200 kPa. The pipe A lies 2.5m above pipe B. Find the difference of pressures measured by mercury as fluid filling U-tube.

Solution:

Given : $s_a = 1.6, p_a = 120\text{kPa}; s_b = 0.8, p_b = 200\text{kPa};$

$h_1 = 2.5\text{m and } s = 13.6$

Let $h =$ Differnce of pressure measured by mercury in terms of head of water.

We know that pressure head in pipe A,

$$\frac{p_a}{\gamma} = \frac{120}{9.81} = 12.2\text{m}$$

Pressure head in pipe B, $\frac{p_b}{\gamma} = \frac{200}{9.81} = 20.4\text{m}$

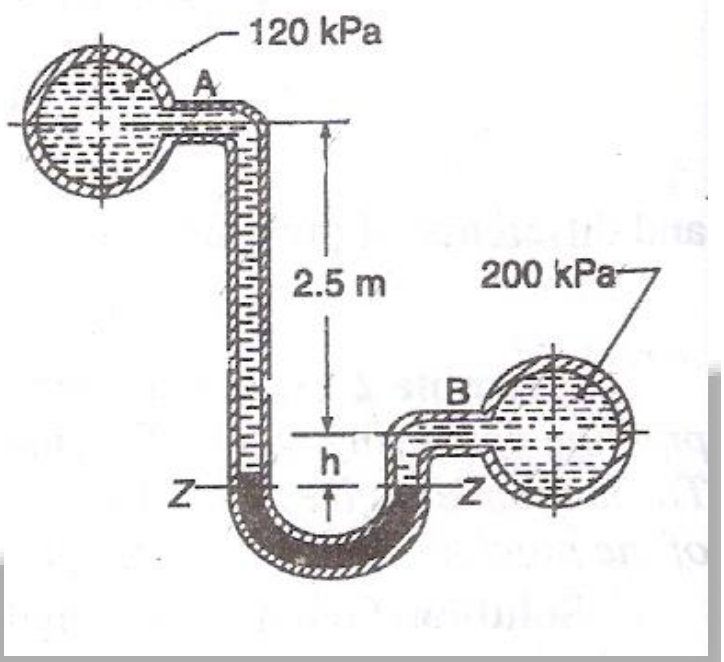

Example

We also know that pressure head in Pipe A above Z - Z

$$= 12.2 + (s_a . h_1) + s.h$$

$$= 12.2 + (1.6 \text{ x } 2.5) + 13.6 \text{ x h}$$

$$= 16.2 + 13.6 \text{ h}$$

Pressure head in Pipe B above Z - Z

$$= 20.4 + s_b h = 20.4 + (0.8 \text{ x h})$$

Equating;

$$16.2 + 13.6 \text{ h} = 20.4 + (0.8 \text{ x h})$$

$$\text{h} = 0.328 \text{ m} = 328 \text{ mm}$$

Inverted Differential Manometer:

- Type of differential manometer in which an inverted U-tube is used.
- Used for measuring difference of low pressure.

1. Pressure head in the left limb above Z-Z = ha-s1h1
2. Pressure head in the right limb above Z-Z = hb-s2h2-s3h3
3. Equating we get, ha-s1h1 = hb-s2h2-s3h3

(Where; ha, hb are Pressure in pipes A and B expressed in terms of head of liquid, respectivel